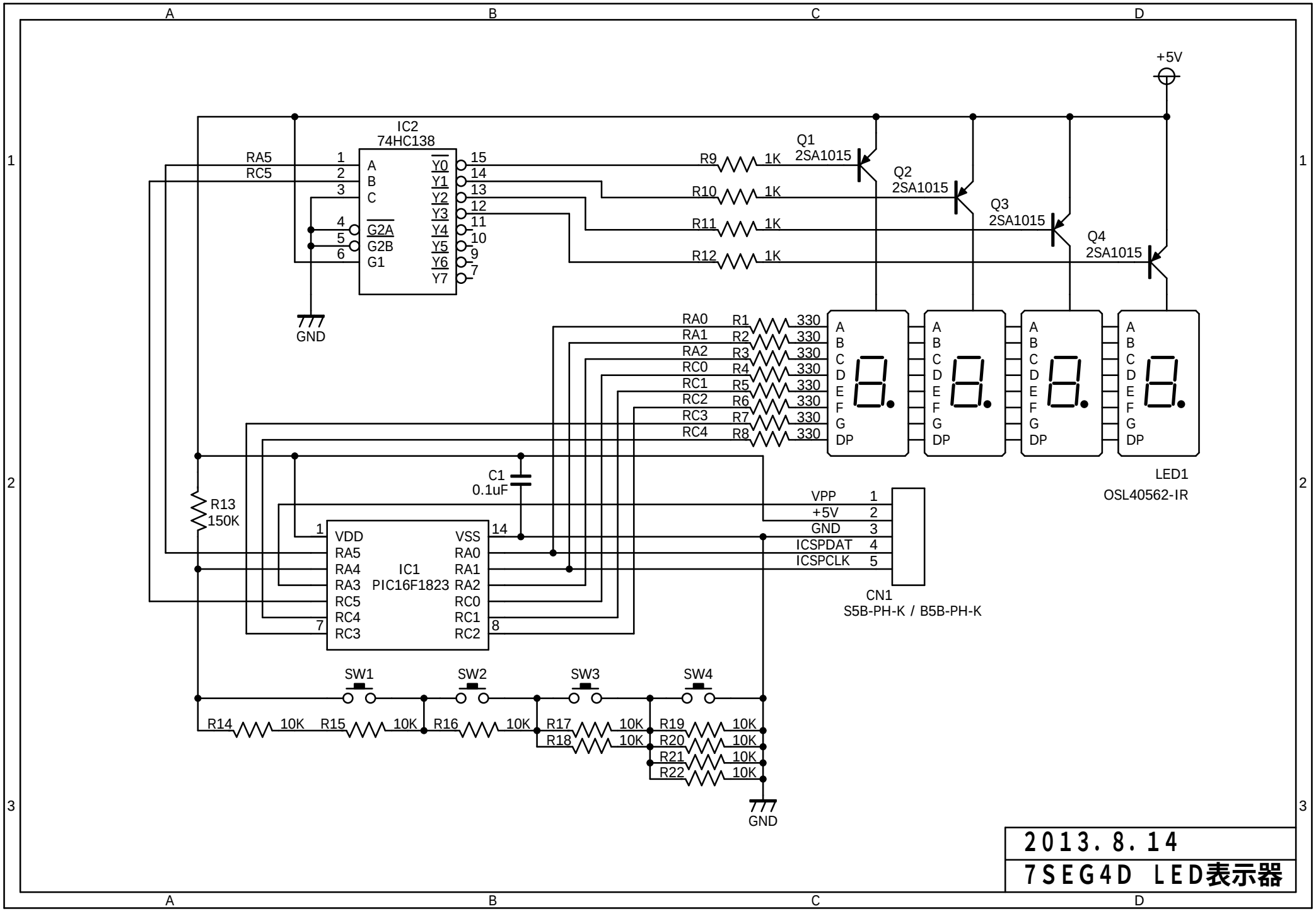
+5V
IC2
74HC138
RA5
RC5
A
B
C
G2A
G2B
G1
Y0
Y1
Y2
Y3
Y4
Y5
Y6
Y7
GND
R9 1K
R10 1K
R11 1K
R12 1K
Q1
2SA1015
Q2
2SA1015
Q3
2SA1015
Q4
2SA1015
RA0 R1 330
RA1 R2 330
RA2 R3 330
RC0 R4 330
RC1 R5 330
RC2 R6 330
RC3 R7 330
RC4 R8 330
A
B
C
D
E
F
G
DP
LED1
OSL40562-IR
C1
0.1uF
R13
150K
VDD
RA5
RA4
RA3
RC5
RC4
RC3
IC1
PIC16F1823
VSS
RA0
RA1
RA2
RC0
RC1
RC2
VPP
+5V
GND
ICSPDAT
ICSPCLK
CN1
S5B-PH-K / B5B-PH-K
SW1
SW2
SW3
SW4
R14 10K
R15 10K
R16 10K
R17 10K
R18 10K
R19 10K
R20 10K
R21 10K
R22 10K
GND
2013.8.14
7SEG4D LED表示器